Metalrota S.r.l. Modena - ITALY	GEARMOTOR	Code: ARD110.PM81	Rev:

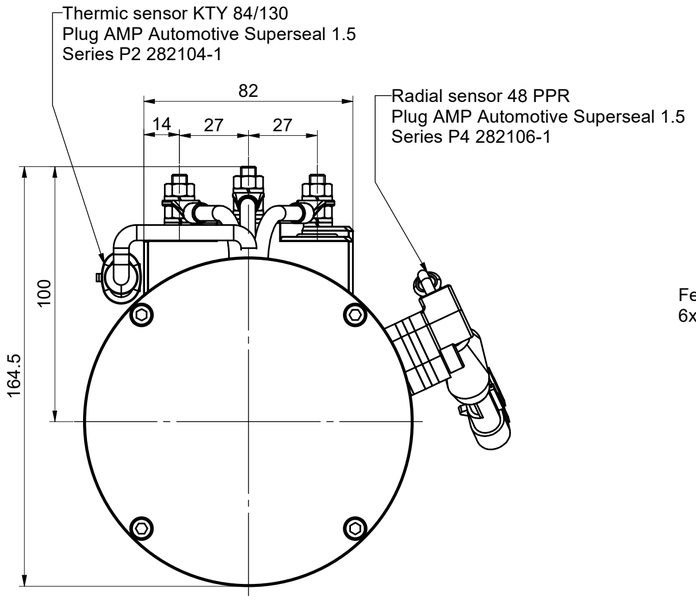

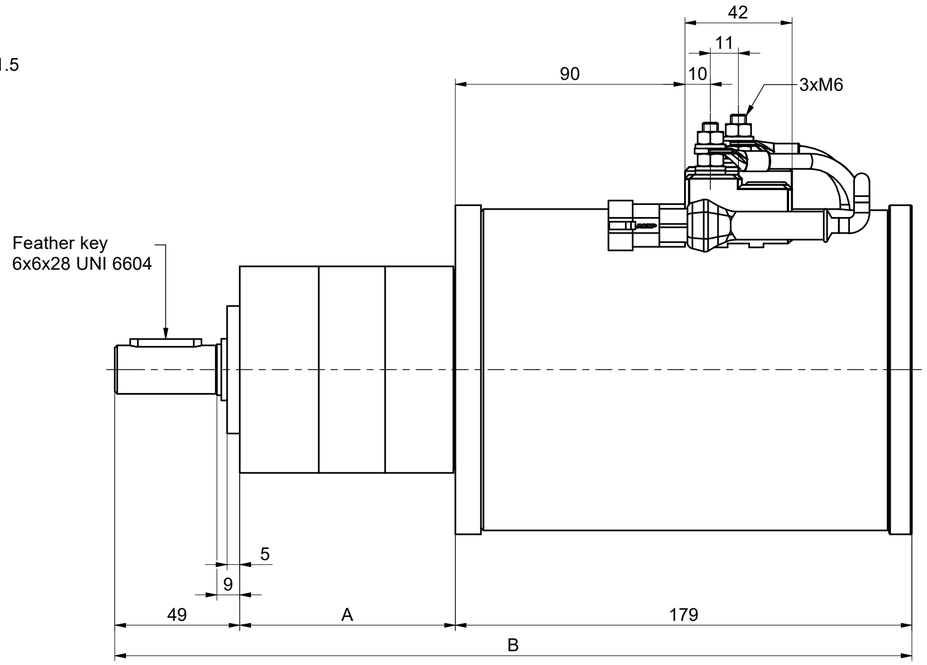

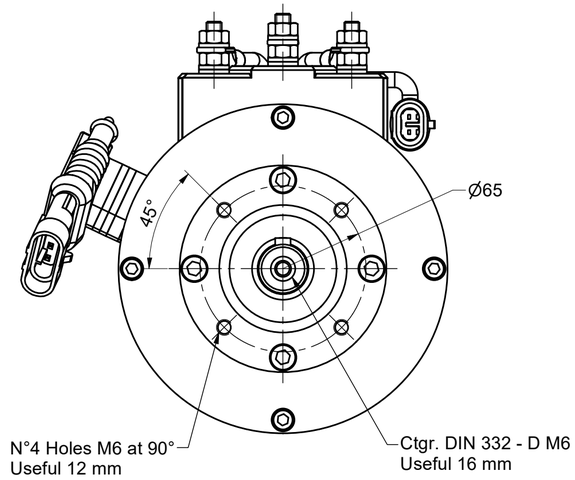

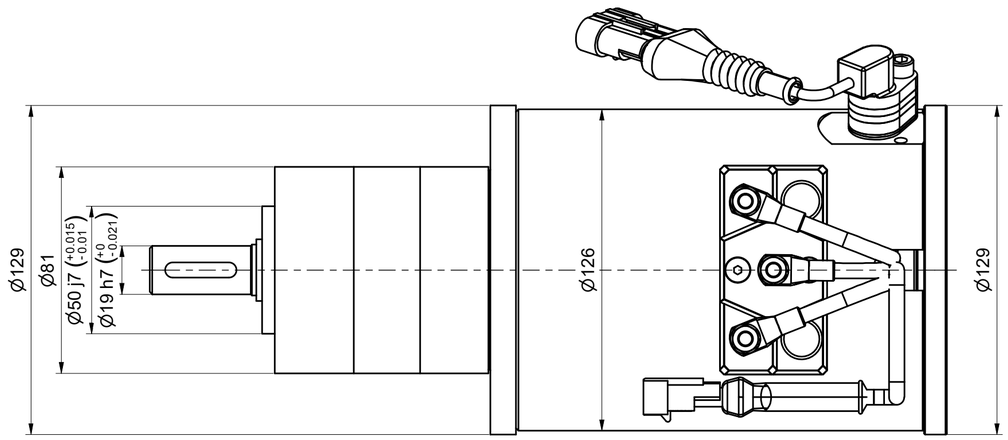

Dimensions	1 Stage	2 Stages	3 Stages
A	59.9 ± 0.5	81.6 ± 0.5	103.3 ± 0.5
B	287.9	309.6	331.3