Metalrota S.r.l.
Modena - ITALY

DRIVE WHEEL

Code: MR200FR-AC

Rev:

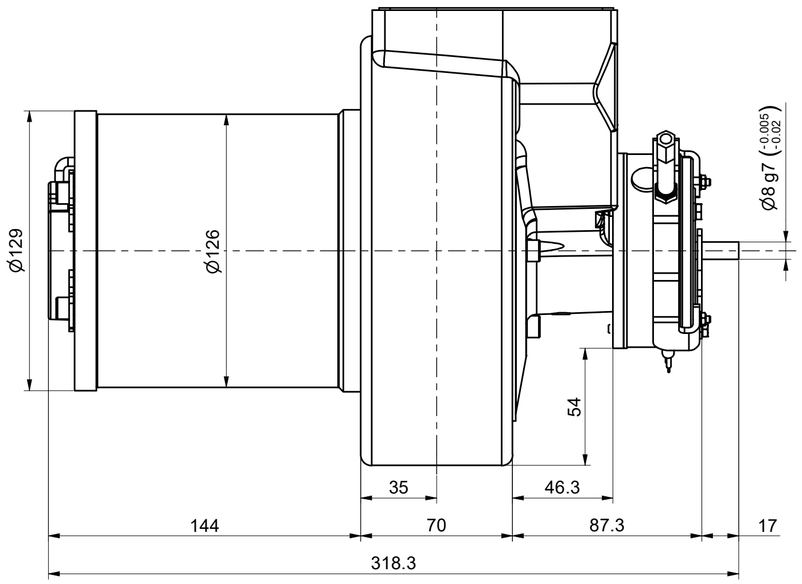

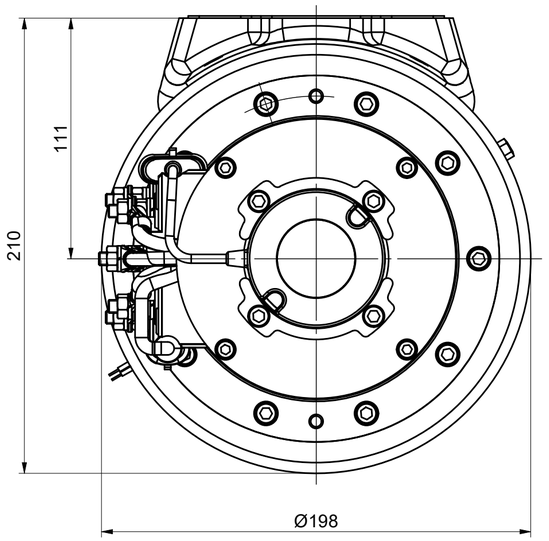

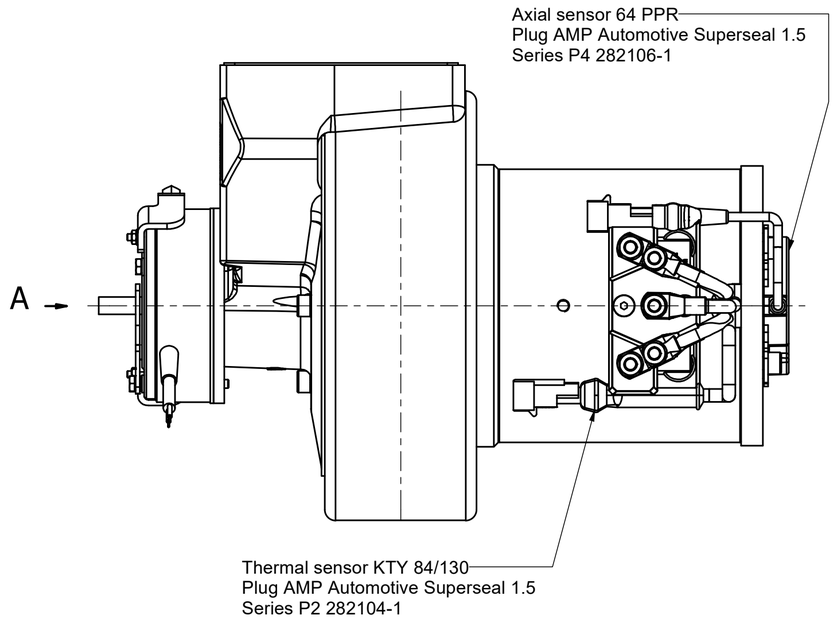

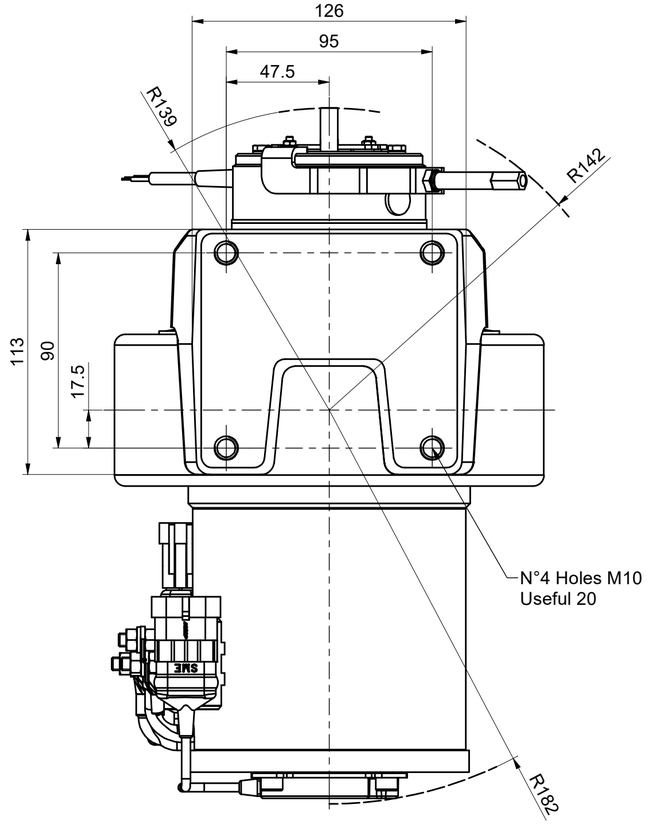
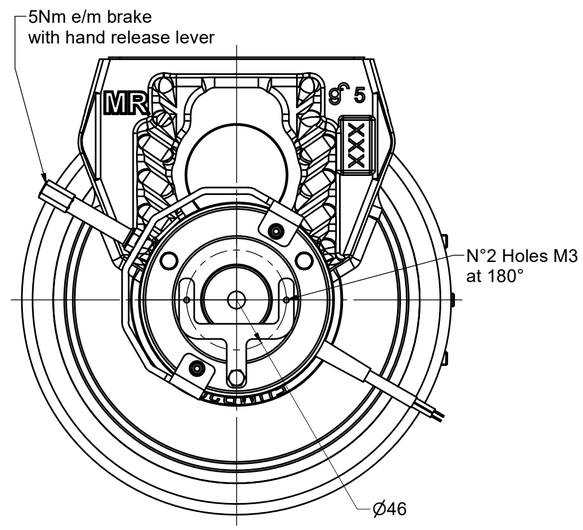
View from "A"