Metalrota S.r.l. Modena - ITALY	DRIVE WHEEL	Code: MR240FR-AC	Rev:

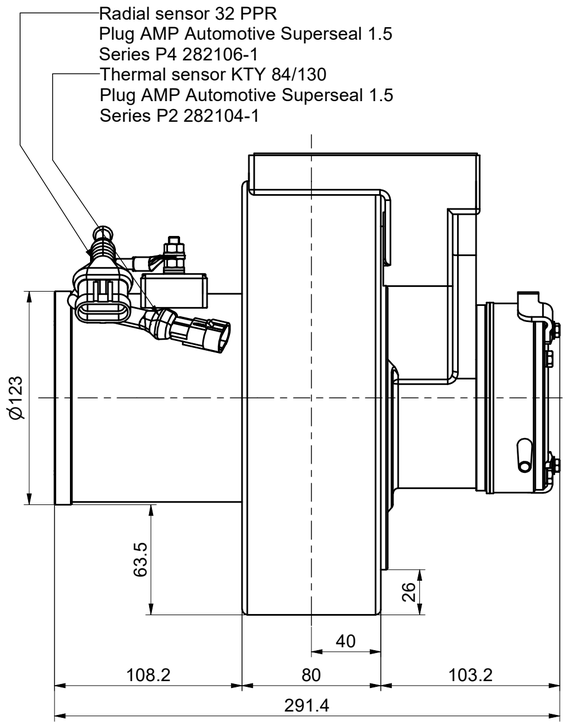

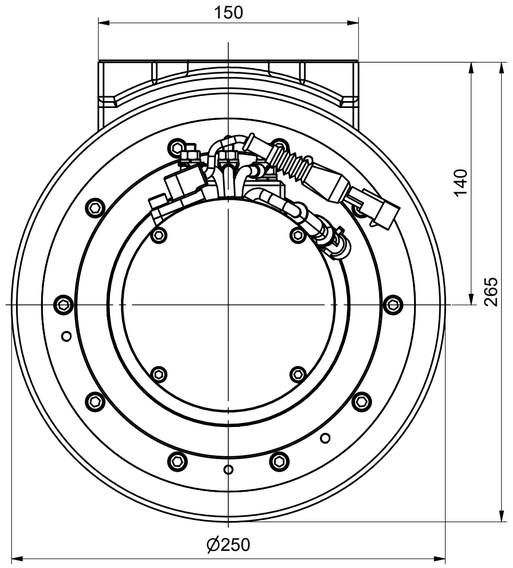

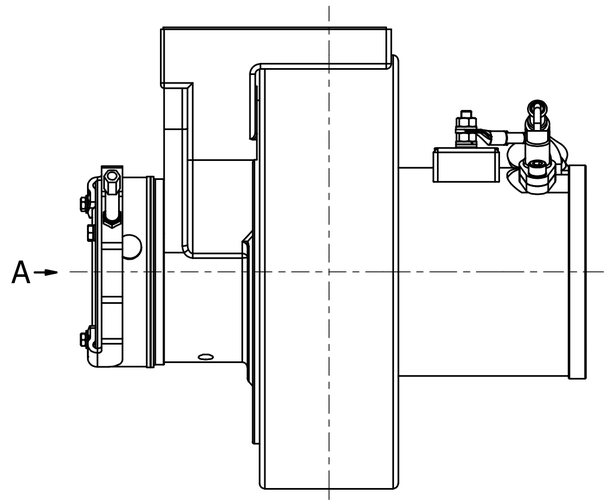

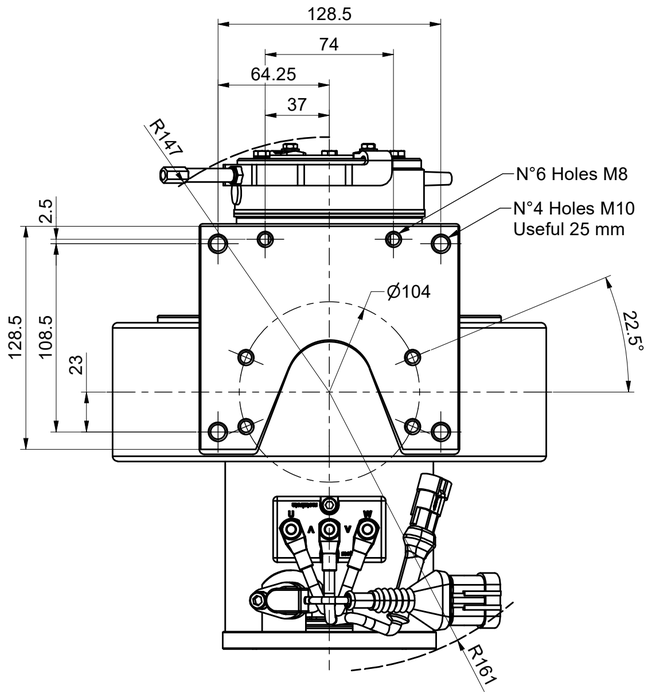
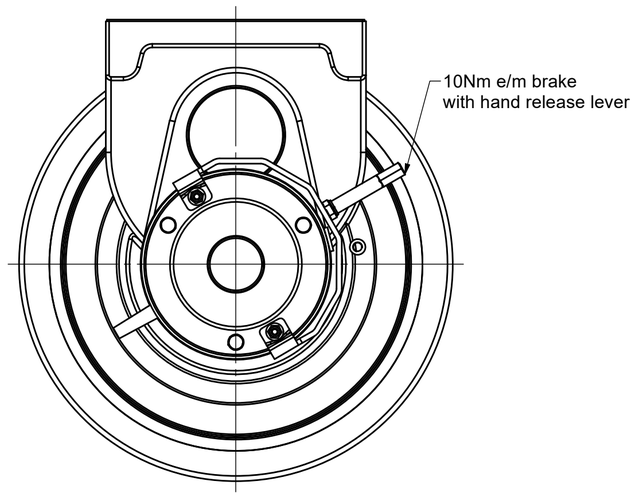
View from "A"