Metalrota S.r.l. Modena - ITALY	DUAL DRIVE SYSTEM WITH DC MOTOR	Code: MRH116.DC.D160	Rev:

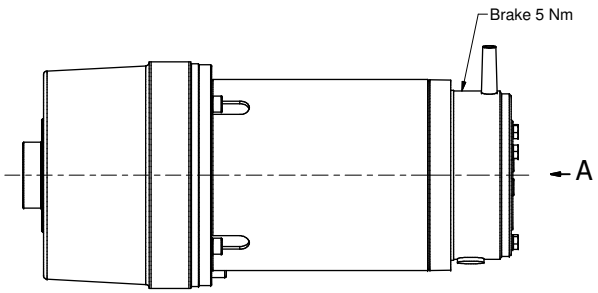

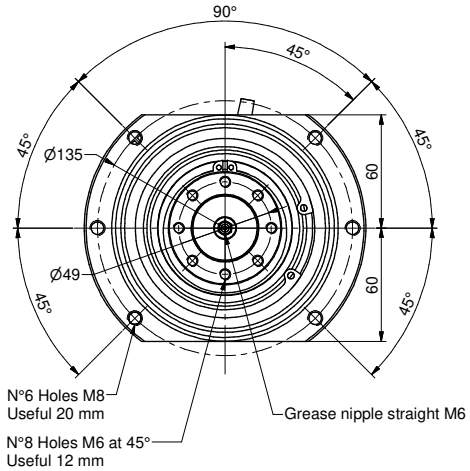

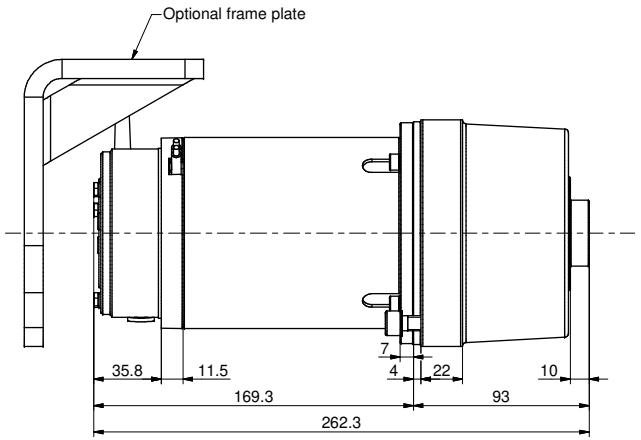

View with wheel and frame plate
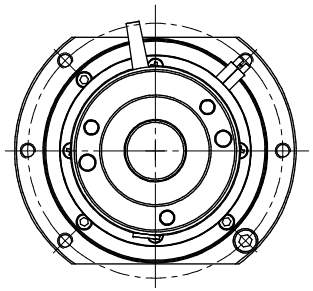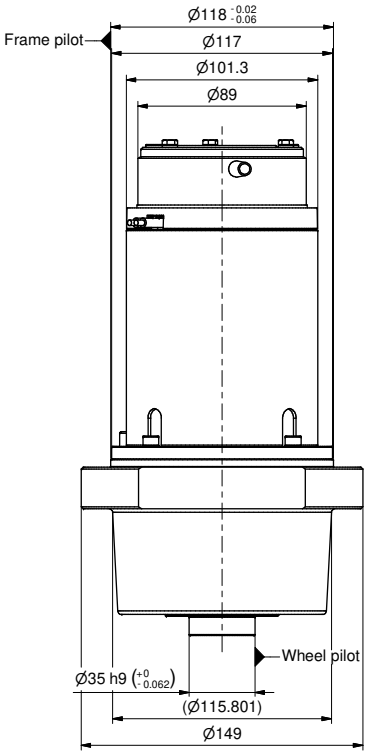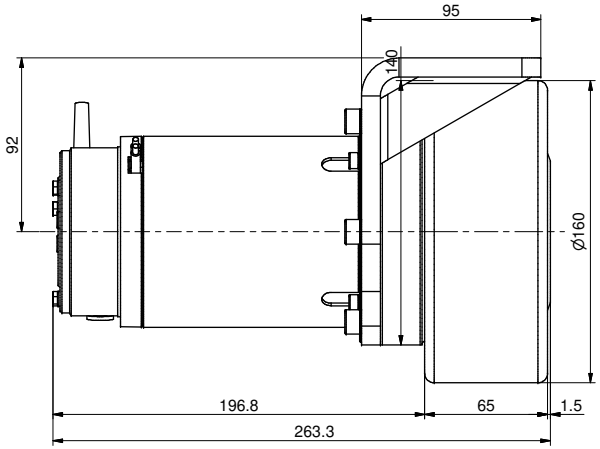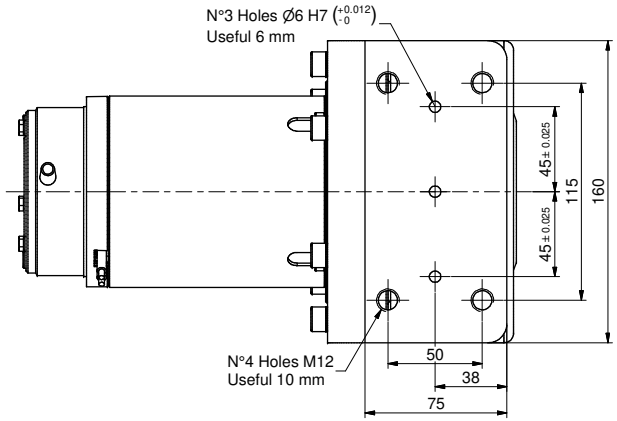
View from "A"