Metalrota S.r.l. Modena - ITALY	DUAL DRIVE SYSTEM WITH DC MOTOR	Code: MRH116.DC.D200	Rev:

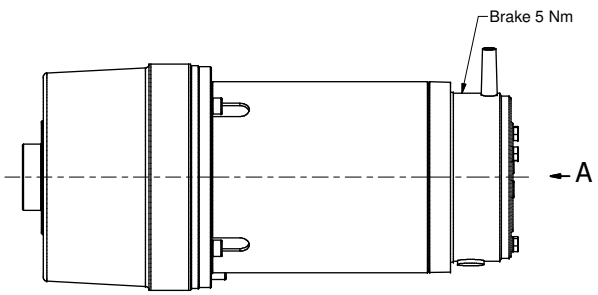

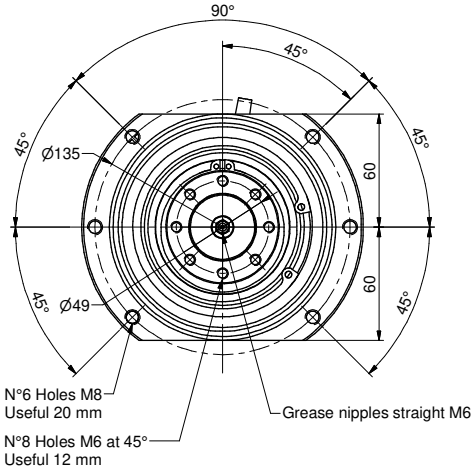

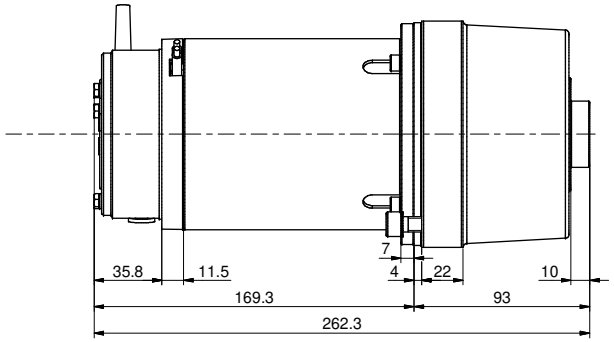

View from "A"

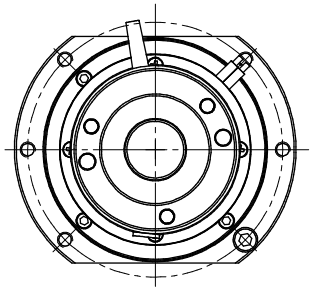

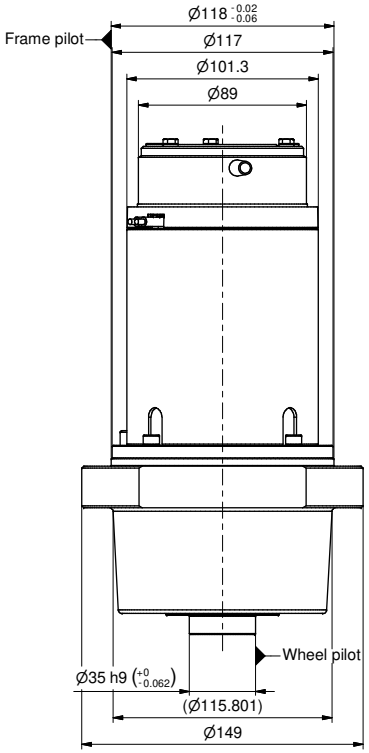
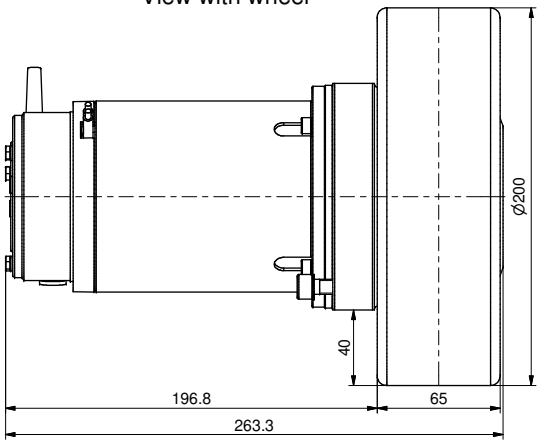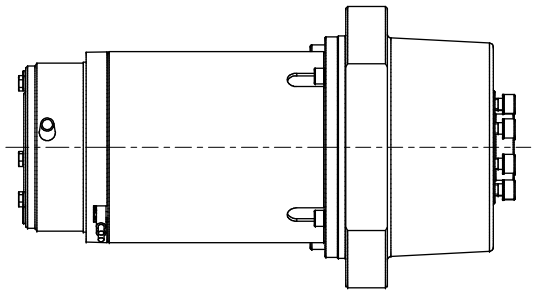
View with wheel