Metalrota S.r.l. Modena - ITALY	DUAL DRIVE SYSTEM WITH AC MOTOR	Code: MRH116.AC.D160	Rev:

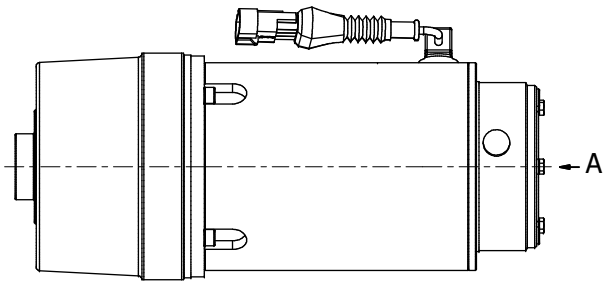

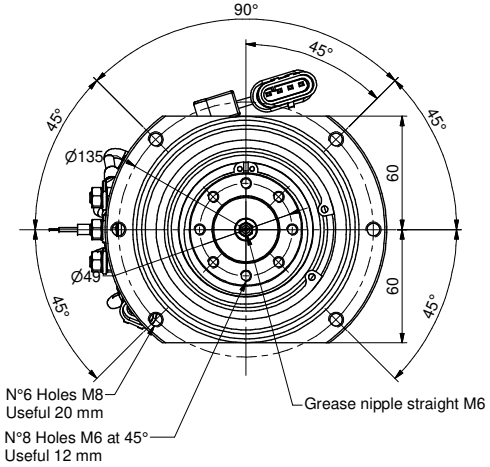

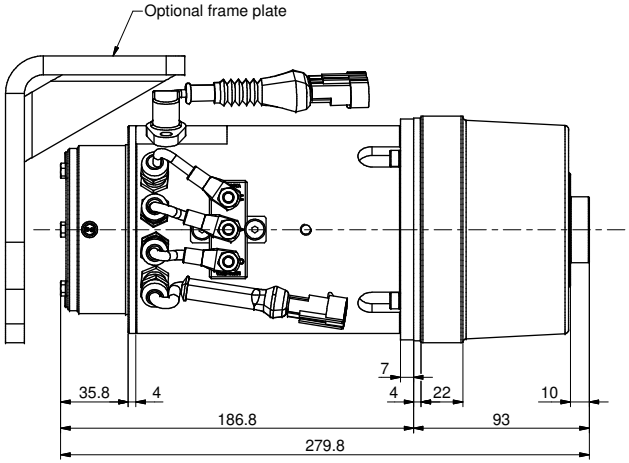

View from "A"

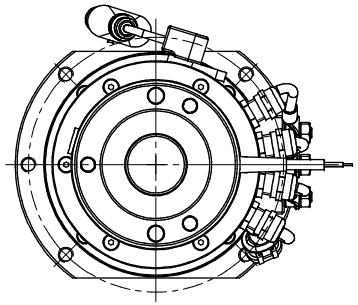

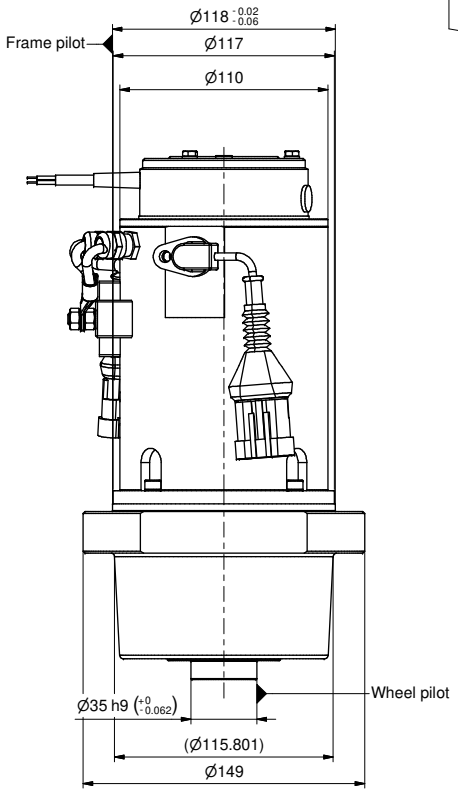
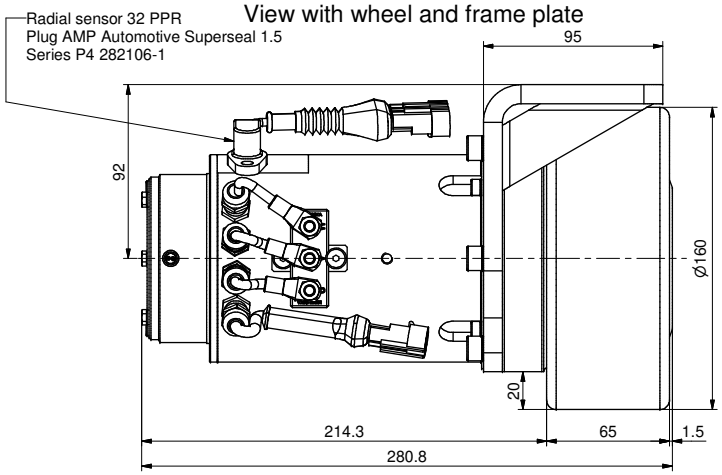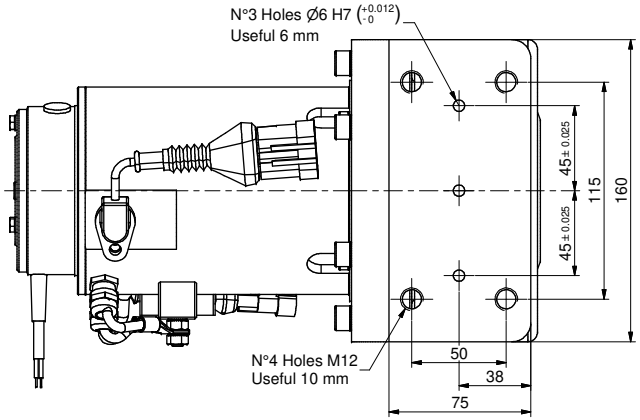
View with wheel and frame plate