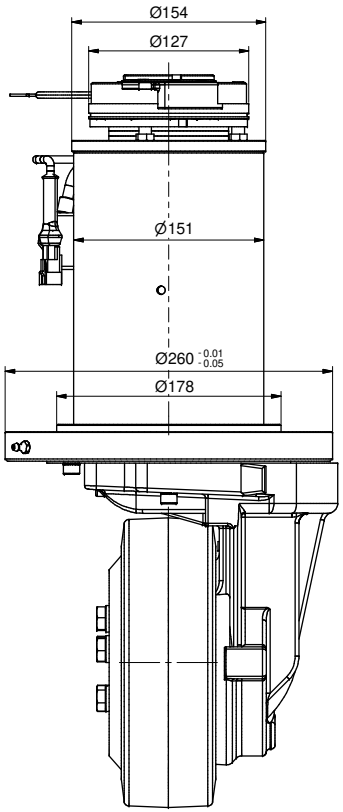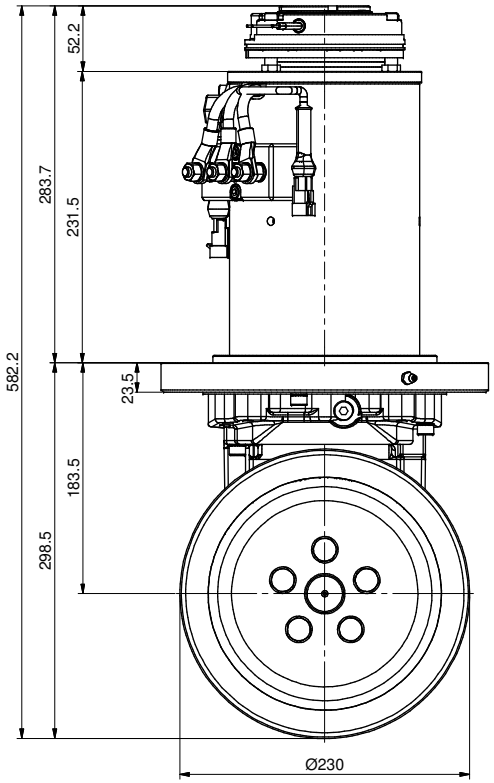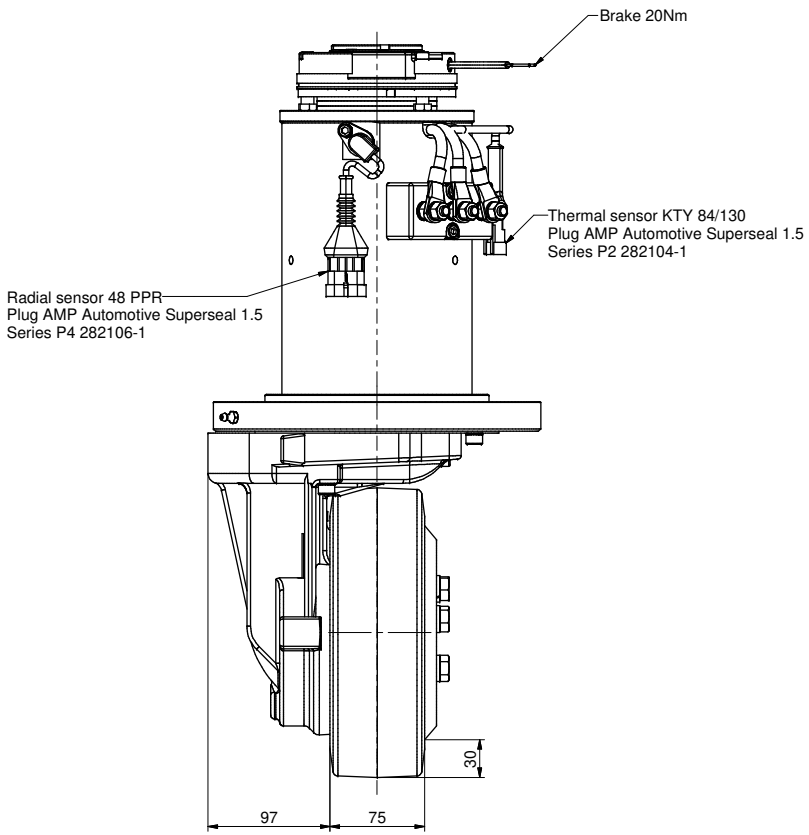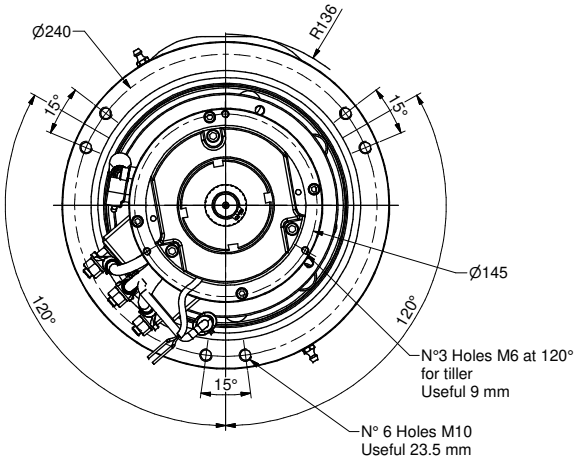Metalrota S.r.l. Modena - ITALY	DRIVE WHEEL	Code: WR151ECOFM-AC	Rev: