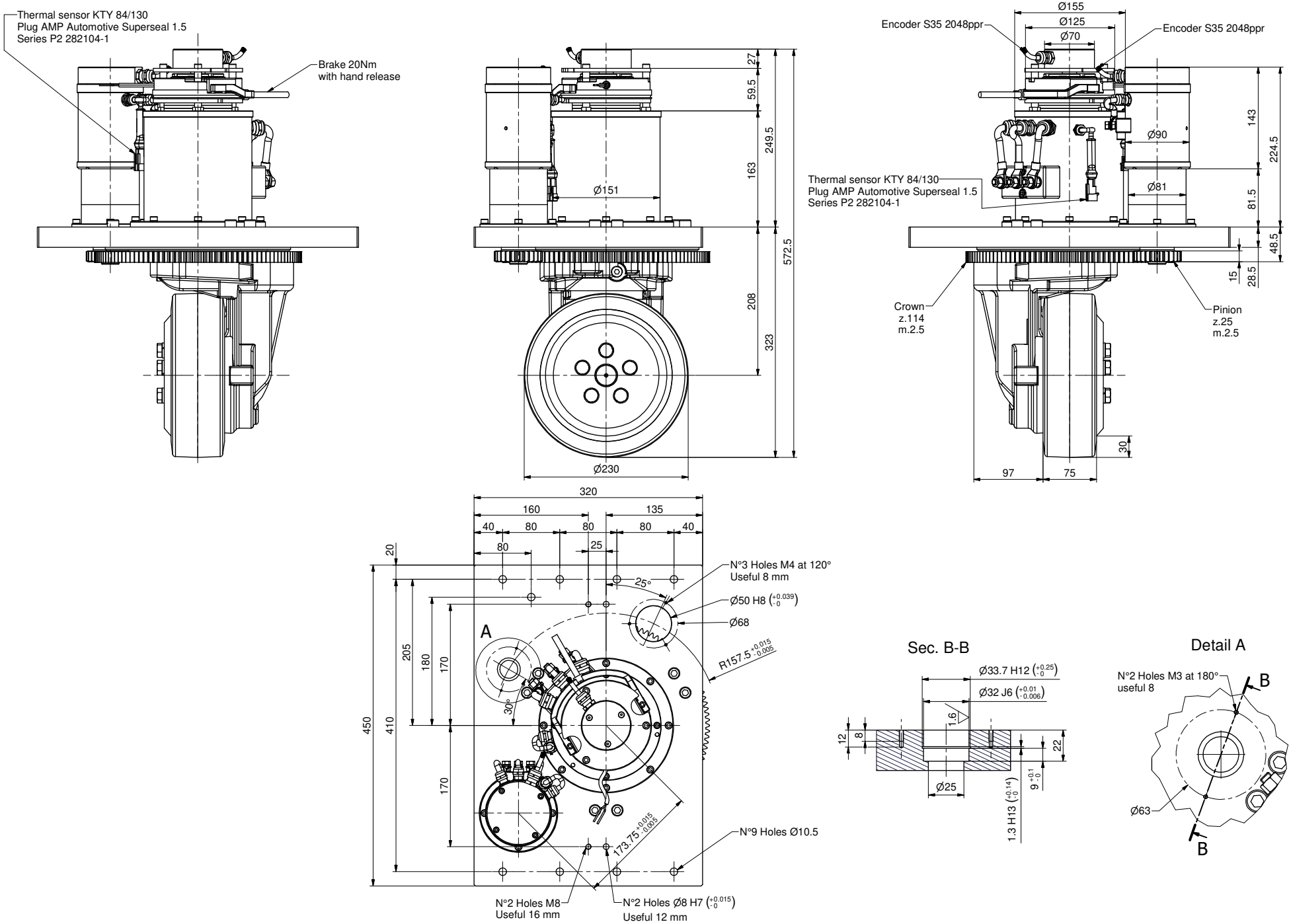Metalrota S.r.l. Modena - ITALY	STEERING DRIVE WHEEL	Code: WR151ECOFMS-PMAC	Rev: