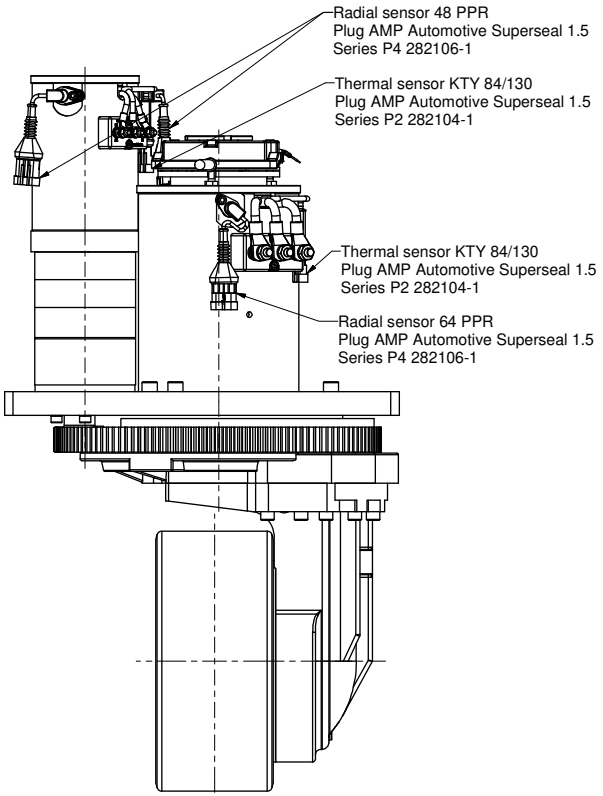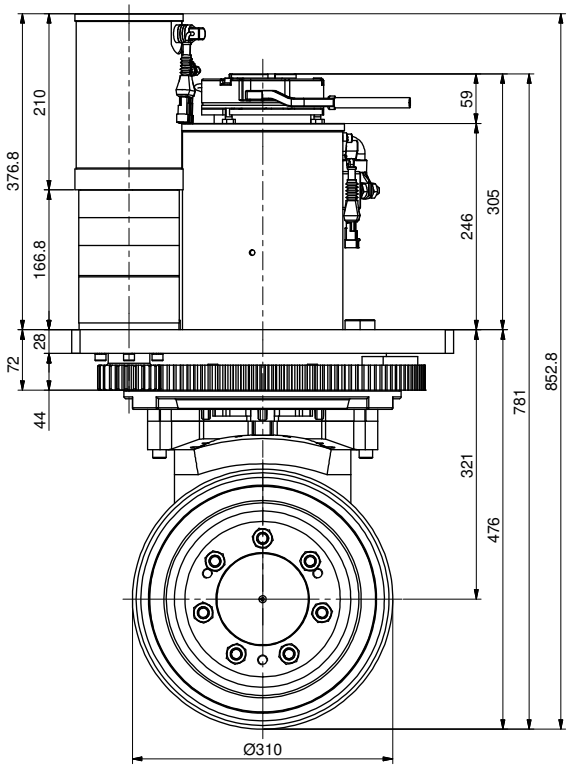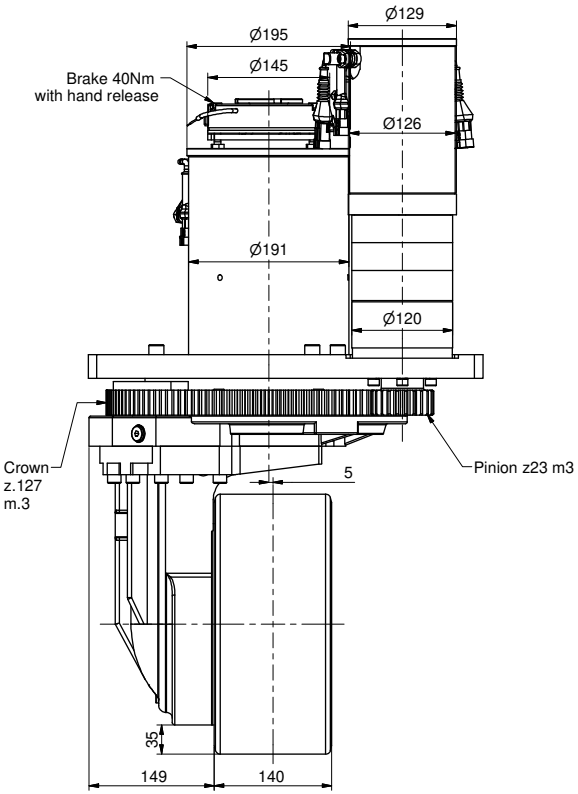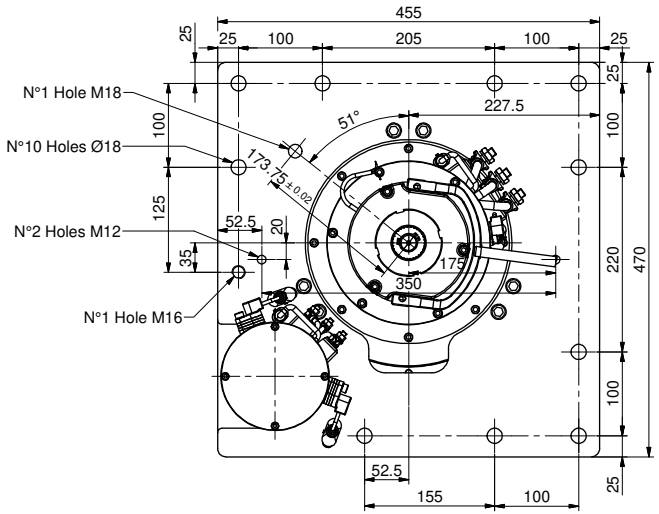Metalrota S.r.l. Modena - ITALY	STEERING DRIVE WHEEL	Code: WR310FMS-AC-D.173-P120	Rev: