Metalrota S.r.l. Modena - ITALY	STEERING DRIVE WHEEL	Code: WR450FMS-AC	Rev:

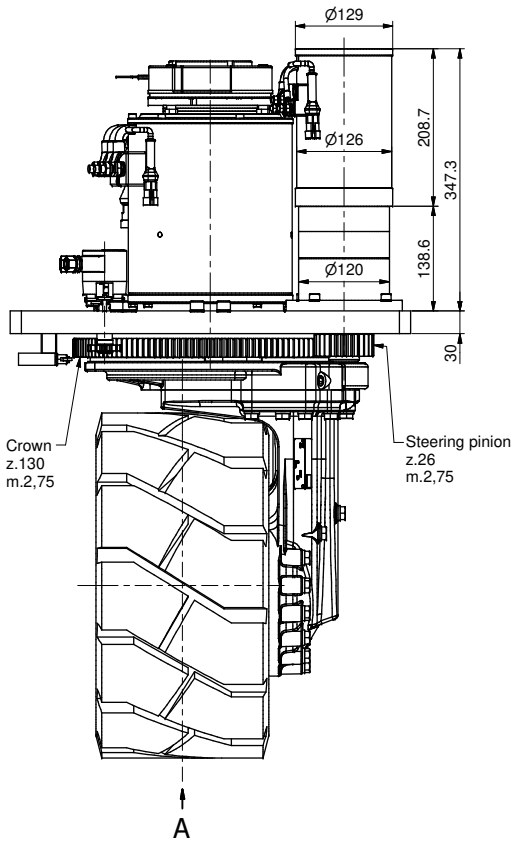

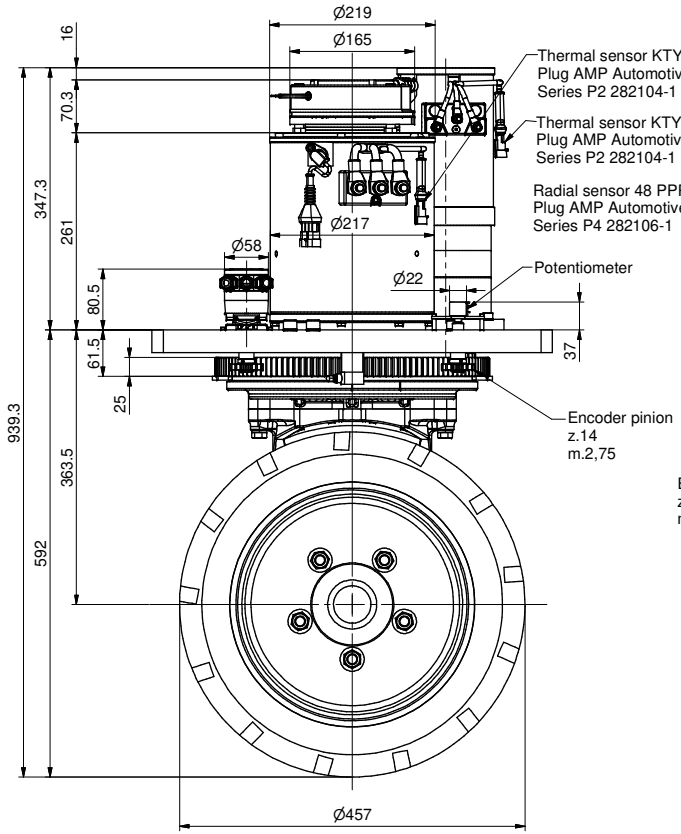

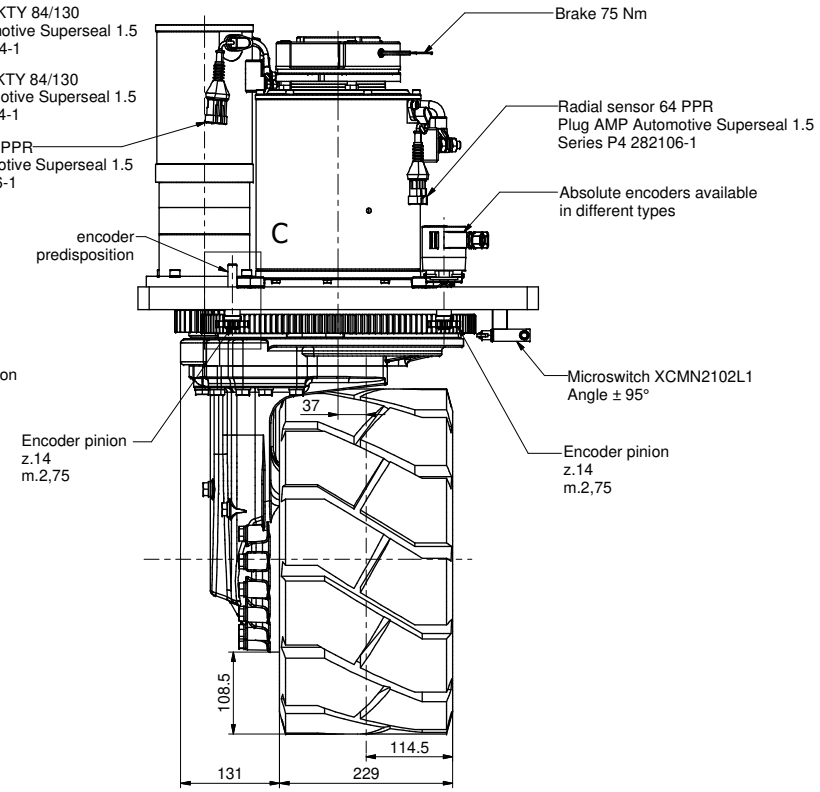

View from "A"

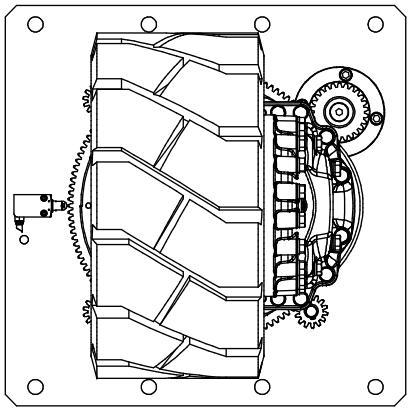

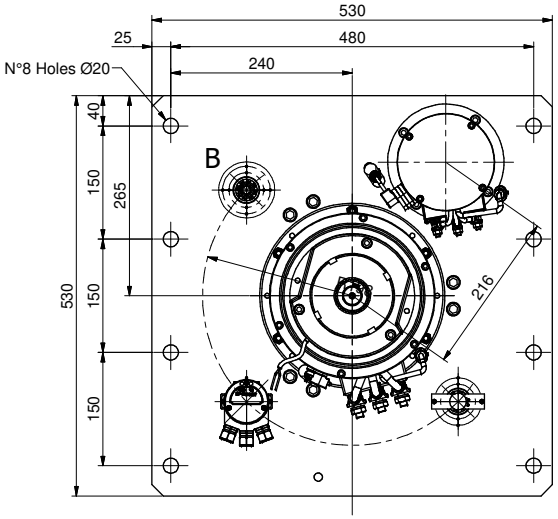

Detail B

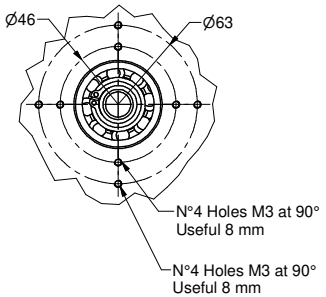
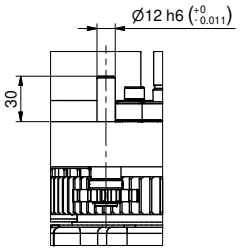
Detail C